REVISONS			
REV	DESCRIPTION	DATE	APPR
1	Initial Release	29-Jul-19	S.X

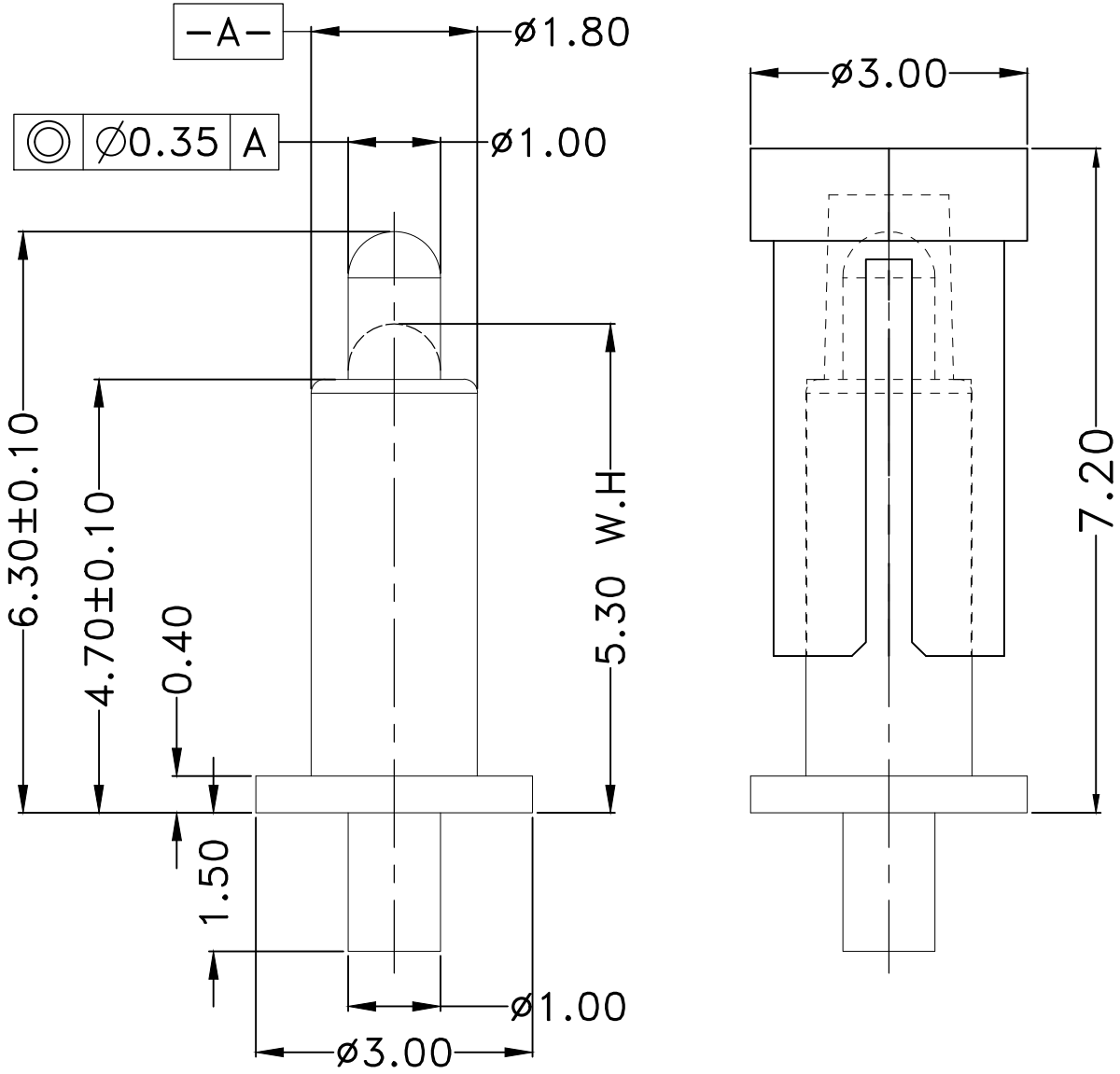

NOTES:

1.Material
- 1-1 Plunger: Copper Alloy
- 1-2 Body: Copper Alloy
- 1-3 Spring: stainless steel

2.Finish
- 2-1 Plunger:5u" Min. Gold over 50u" Min. Nickel
- 2-2 Body:5u" Min. Gold over 50u" Min. Nickel

3.Mechanical Specification
- 3-1 Spring Force:60±15gf at Working height
- 3-2 Durability:10,000 cycles

4.Electrical Specifications
- 4-1 Rating Voltage:12V
- 4-2 Rating Current: 1A
- 4-3 Contact Resistance: 50mohm max.at working height

5.Environmental Performance
- 5-1 Storage and operating temperature range:-40°C~+85°C
- 5-2 Humidity: 10% RH to 90% RH.
- 5-3 Salt Spray: 24H

6.Package: PE Bag

UNLESS OTHERWISE SPECIFIED,TOLERANCE ARE:
X.±0.5 .X±0.1 .XX±0.05 .XXX±0.005 ANGEL±2

NOTICE- These drawing,specifications,or other date are,and remain property of wizconn corpation.(2)are confidential and not to be disclosed to any person other than those to whom they are given by wizconn corpation,or to any other person to anyone for any purpose is not to be regarded by implication orotherwise in any manner liscensing, granting rights to permitting such holder or any others person to manufacture,use or sell any product,process or design, patented or otherwise,that may in any way be related to or disclosed by said drawings,specifications,or other date.

TITLE: POGO PIN (ø1.5*6.3)		深圳市为致康科技有限公司 Shenzhen Wizconn Technology Ltd.	
USE ON: CUSTOMER	DESIGN: Jason	DWG NO.: DP156353-1	
MATERIAL:	CHECK: Jason	PART NO.: DP156353-1	
FINISH:	APPROVED: Cliff	SCALE: 1:1	REV: 1 / SHEET: 1 OF 1
THIRD ANGLE PROJECTION	UNIT: mm	CAD FILE:	